C04	11.08.17	Corrected acc. to rebuilding

This drawing is Revised by Skipskompetanse

Skips kompetanse

Tlf.: 416 66 861 - post@skipskompetanse.no - www.skipskompetanse.no

WHEELHOUSE DECK

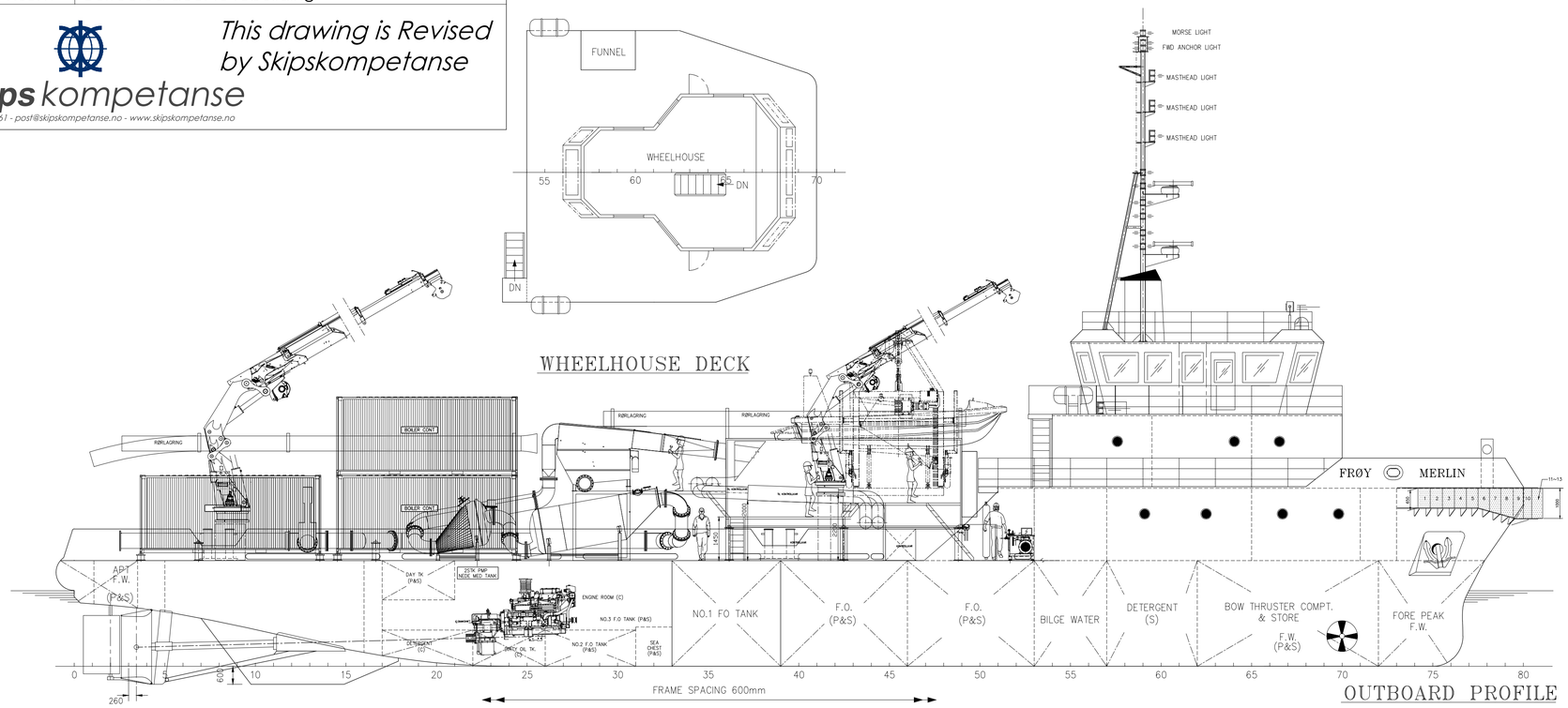

OUTBOARD PROFILE

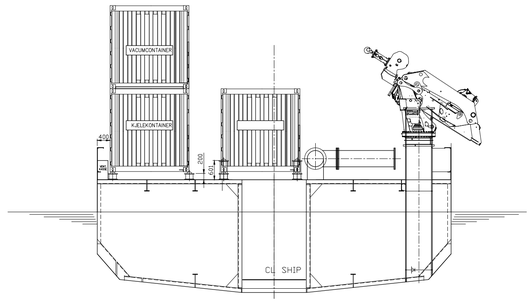

SECTION APPR. FRAME 5

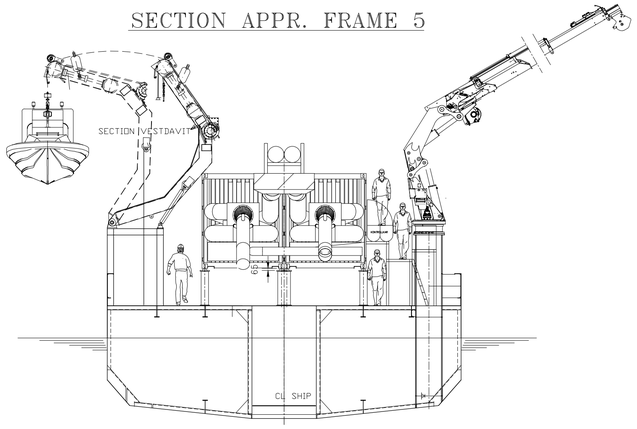

SECTION APPR. FRAME 42

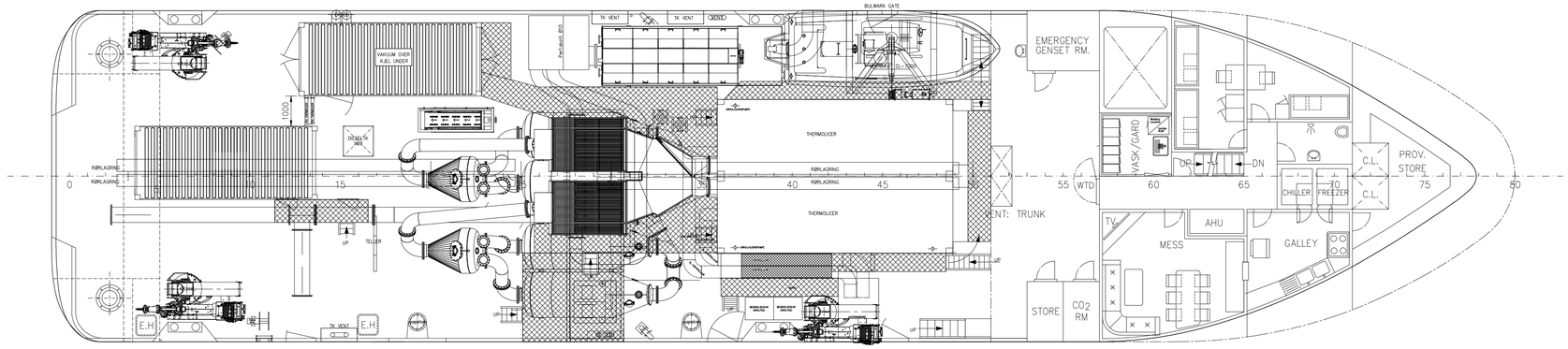

MAIN DECK

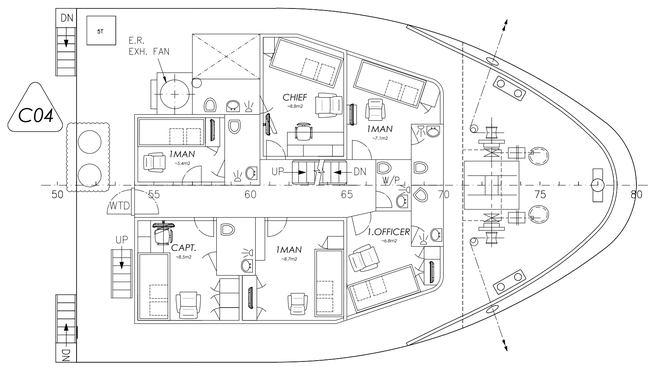

FORECASTLE DECK

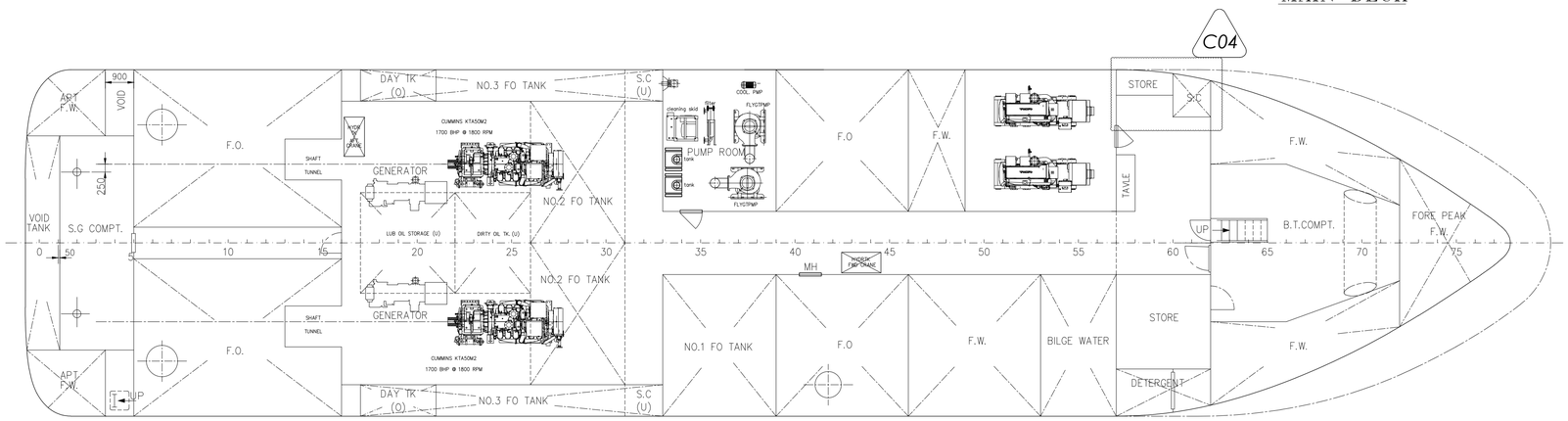

BELOW MAIN DECK

FRØY MERLIN

PRINCIPAL PARTICULARS

LENGTH O.A	48.00m
LENGTH W.L	46.20m
BEAM MLD.	11.00m
DEPTH MLD.	3.50m
DRAFT DESIGNED	2.50m
DRAFT MAX.	2.80m
COMPLEMENT	12 MEN
ENGINE	CUMMINS KTA50M2 1700 BHP @ 1800 RPM

THIS DRAWING AND THE INFORMATION CONTAINED HEREIN ARE SUPPLIED ON THE UNDERSTANDING THAT THEY ARE THE EXCLUSIVE PROPERTY OF CONAN WU & ASSOCIATES. THEY MUST NOT BE USED OR REPRODUCED IN WHOLE OR IN PART WITHOUT PERMISSION IN WRITING.

DATE	MODIFICATION	REV	BY
06-06-16	AS BUILDT	I	B.F
31-05-16	SOME CHANGES ON MAIN DECK	H	B.F
26-05-16	SOME CHANGES ON MAIN DECK	G	B.F
24-05-16	SOME CHANGES ON MAIN DECK	F	B.F
09-05-16	SOME CHANGES ON MAIN DECK	E	B.F
16-03-16	ADDED ROPE REJECTS AND CHANGE BUTTOM FRAME 15-18	D	B.R.
26-02-16	ACC. TO OWNERS COMMENTS	C	B.F.
14-09-12	AMENDED AS PER YARD'S COMMENTS	B	WILLIAM
26-03-08	AMENDED BY SHIPYARD	A	HERRY

SHIP:

48m MULTI-PURPOSE DECK SHIP

TITLE:

General Arr

OWNER	SEABRIGHT SDN BHD
BUILDER	SEALINK SHIPYARD SDN BHD — YARD NO. SSS155
CLASS	LR

CONAN WU & ASSOCIATES
NAVAL ARCHITECTS
MEWAH BLDG., 5 INTERNATIONAL BUSINESS PARK, JURONG EAST, SINGAPORE 609914.
TEL.: (65) 6562-1138, FAX.: (65) 6562-1238, (65) 6562-0123, E-MAIL: mail@cwa.com.sg

DRAWN	CHECKED	APPROVED	SCALE	DRAWING NO.	REV
CWS 04.01.05	CHUA C.M. 04.01.05		1:100	6347-101-001	I